FLEXIBLE MISSION PLATFORM

The Flexible Mission Platform (FMP™) is a payload, mission, and platform agnostic system. FMP allows users to host the weapon, sensor, or other mission package of their choice from the vehicle, ship, container, or trailer of their choice.

FMP is built around Moog's world-renowned military motion control technology. Options include integration of Moog's high-performance stabilization and weapon stores management systems (SMS), providing missile firing capability to suit any mission.

PLATFORM FEATURES

- Customer designated payload and quantity
- Hinged reloading mechanism for safe and rapid missile replenishment
- Rapid "concept to production" lead time
- Suitable for land vehicles, trailers, containers, and surface ships

PLATFORM OPTIONS

- Stabilization system for shoot on the move capability
- Multi-channel rotary joint for high speed data transfer
- Low inertia mechanical structures
- Covers for ingress protection
- Mast and sighting systems
- Vehicle display and control interfaces

Credit: U.S. Army

Credit: Arco Ardon

Credit: Roketsan

FMP™

MOOG

PAYLOAD AGNOSTIC

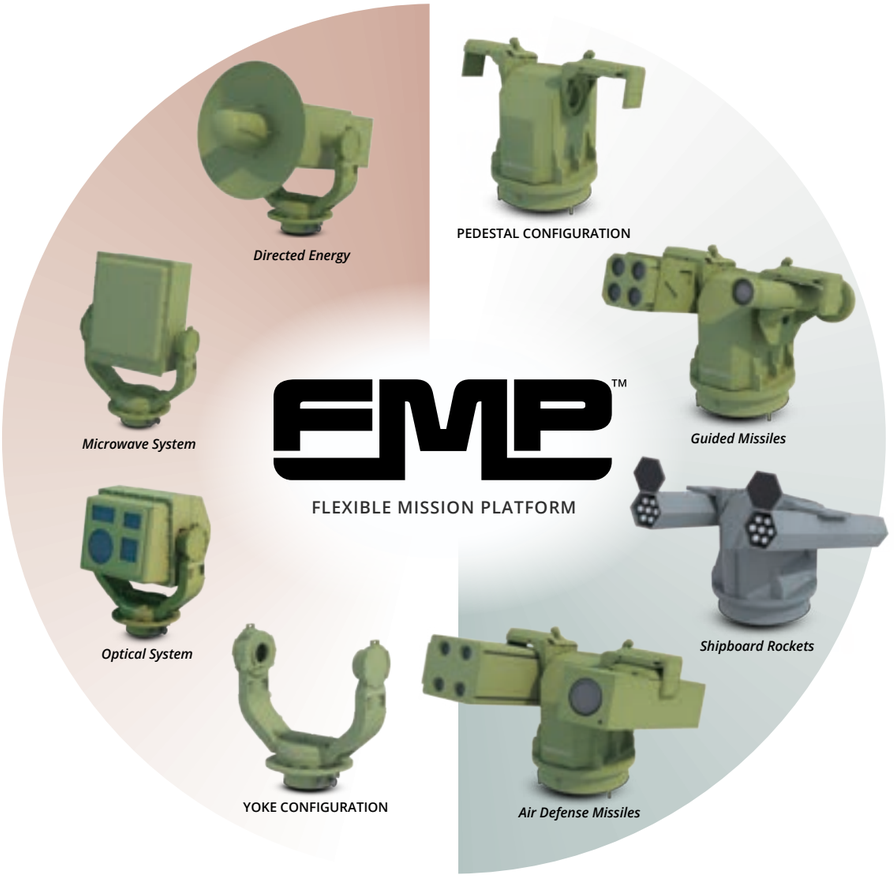

PLATFORM AGNOSTIC

MEDIUM
TRACKED VEHICLES

MEDIUM PROTECTED
MOBILITY VEHICLES

LIGHT PROTECTED
MOBILITY VEHICLES

UNMANNED
ROBOTIC VEHICLES

FUTURE GENERATION
COMBAT VEHICLES

Credit: U.S. Navy/Chief Mass Communication Specialist Shannon Renfroe

SURFACE
SHIPS

CONTAINERIZED
PLATFORMS

TRAILER
PLATFORMS

WEAPON STORES MANAGEMENT SYSTEM (SMS)

For missile hosting applications, Moog's proven Weapon SMS can be integrated into the FMP. The system allows users to benefit from short lead times, rapid integration and ease of future upgrades due to the flexible, modular design of the Weapon SMS.

The Third Generation Weapon SMS is a modular COTS weapons control system that seamlessly integrates with vehicle sensors and mission management systems to provide the crew with a superior fire-control solution.

This lightweight rugged system is an affordable solution to stores management on air, land and sea platforms. The SMS leverages Moog's extensive experience in systems integration, internal software development, weapons technology, and fire control solutions. This design ensures FMP's value for future mission requirements and the selection of differing weapons.

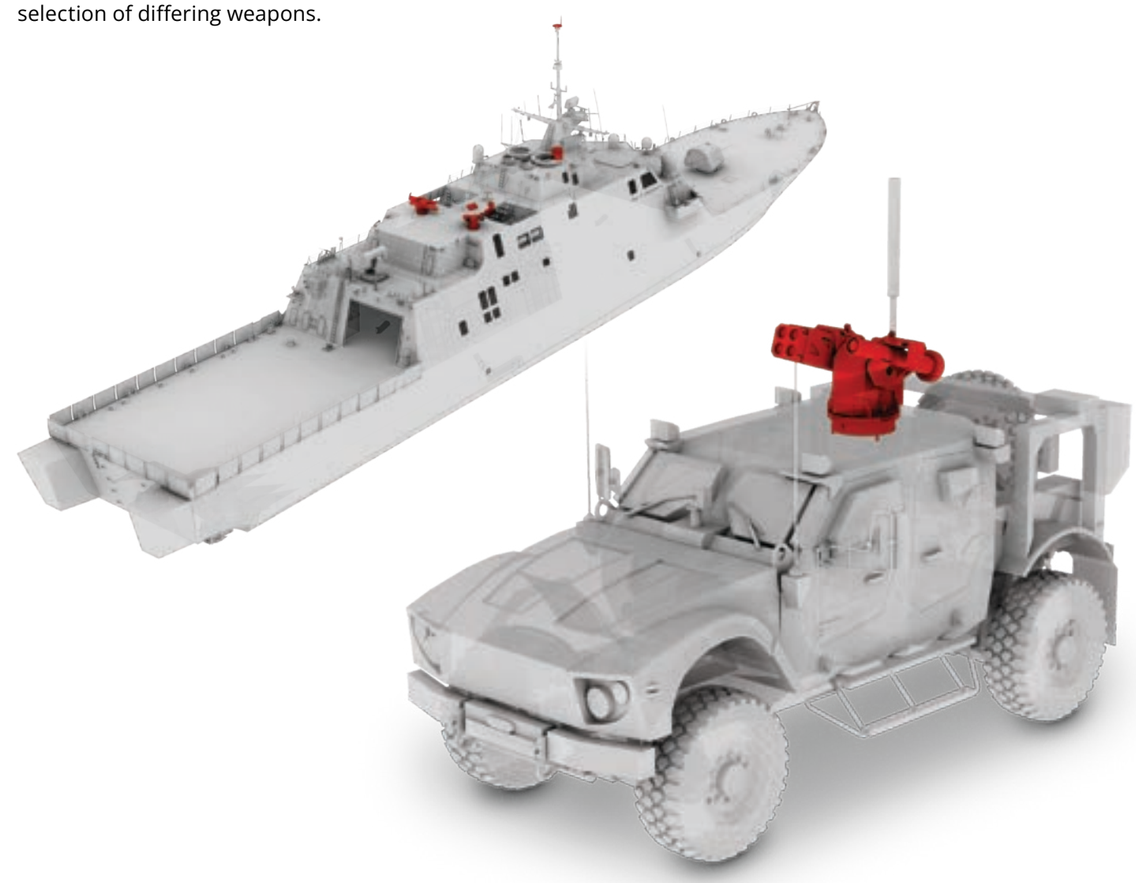

Weapon SMS Components

WEAPON
CONTROL PANEL (WCP)

ENHANCED STORES
INTERFACE UNIT (E-SIU)

ENHANCED STORES
MANAGEMENT
COMPUTER (E-SMC)

CUSTOMIZABLE EFIS
PRIMARY FLIGHT AND
MULTI-FUNCTION DISPLAYS

GUN ROCKET UNIT
(GRU)

FLEXIBLE MISSION PLATFORM

PERFORMANCE

Feature	Sample Specifications*
Weight (without missile launchers)	~ 350 kg
Power supply	28VDC Per MIL-STD-1275D
Traverse range	360˚ continuous rotation (with optional slip ring)
Typical elevation range	-10˚ to + 30˚
Speed traverse	1 rad/s
Acceleration traverse	1.7 rad/s^2
Speed elevation	0.5 rad/s
Acceleration elevation	3 rad/s^2

**For specifications on a particular configuration, please call.*

SAMPLE CONFIGURATION AND DIMENSIONS (PEDESTAL STYLE)

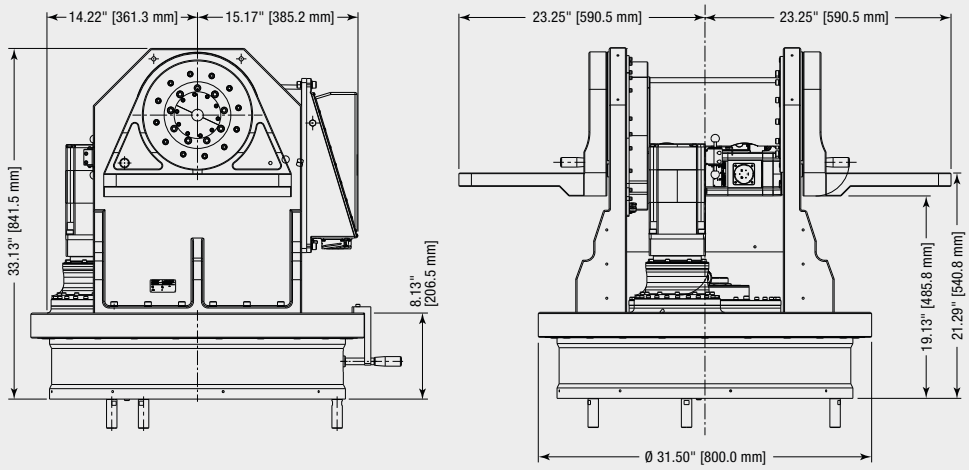

SAMPLE CONFIGURATION AND DIMENSIONS (YOKE STYLE)

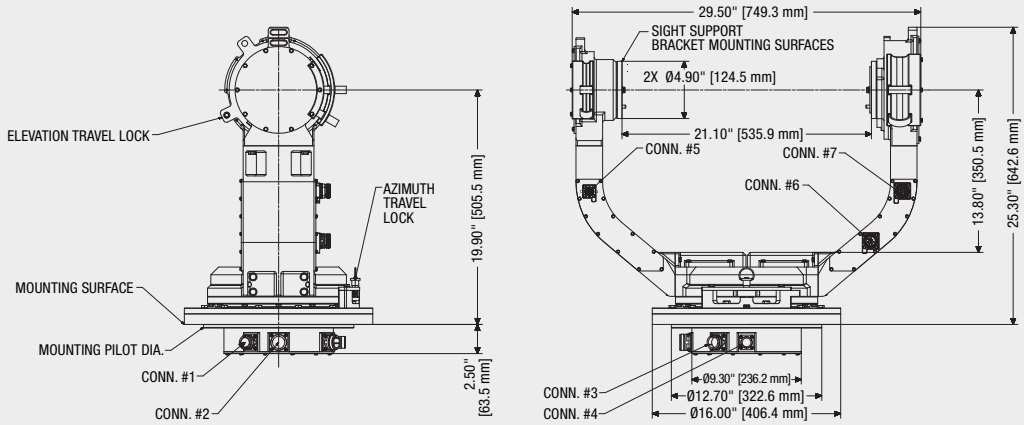

AMERICAS
dcs@moog.com
www.moog.com/defense

AUSTRALIA
Info.australia@moog.com
www.moog.com.au

EUROPE
defenceeurope@moog.com
www.moog.com/defence

Moog Space and Defense
Moog Inc.
@Moog_Inc
@Moog.Inc

The appearance of U.S. Department of Defense (DoD) visual information does not imply or constitute DoD endorsement.

Products and Solutions are subject to the export control requirements of the country in which they are manufactured. Export Approvals from the applicable host Governments will be required.

©2024 Moog, Inc. All rights reserved.
Product and company names listed are trademarks or trade names of their respective companies.

Form 500-1068 0324 US